DATASHE

2MP Fixed Dome Network Camera

IPC3612LR3-PF28(40)-E

Key Features

Optics

- Day/night functionality
- Smart IR, up to 30 m (98 ft) IR distance
- 3D DNR (Digital Noise Reduction)

Compression

- Ultra 265,H.265,H.264,MJPEG
- ROI (Region of Interest)

Network

- ONVIF Conformance

Structure

- Wide temperature range: -30°C to 60°C (-22°F to 140°F)
- Wide voltage range of ±25%
- IP67

Specifications

	IPC3612LR3-PF28-E				IPC3612LR3-PF40-E
Camera					
Sensor	1/2.7", 2megapixel, progressive scan, CMOS				
Lens	2.8mm@F1.8				4.0mm@1.8
DORI Distance	Lens	Detect(m)	Observe(m)	Recognize(m)	Identify(m)
	2.8mm	46.7	18.7	9.3	4.7
	4.0mm	66.7	26.7	13.3	6.7
Angle of view(H)	86.5°				112.7°
Angle of View (V)	44.1°				60.1°
Angle of View (O)	106.4°				146.5°
Shutter	Auto/Manual, 1/6~1/100000 s				
Adjustment angle	Pan: 0°~360°		Tilt: 0°~90°		Rotate: 0°~360°
Min. Illumination	Colour: 0.02 Lux (F1.8, AGC ON) 0 Lux with IR				
IR Range	Up to 30m (98 ft) IR range				
Day/Night	IR-cut filter with auto switch (ICR)				
Digital noise reduction	2D/3D DNR				
S/N	>52dB				
IR Range	Up to 30m (98 ft) IR range				
WDR	DWDR				
Video					
Video Compression	Ultra 265,H.265,H.264,MJPEG				
Frame Rate	Main Stream:1080P (1920*1080): Max. 25 fps; Sub Stream:4CIF (704*576): Max. 25 fps;				
OSD	Up to 4 OSDs				
Privacy Mask	Up to 4 areas				
ROI	Up to 2 areas				
Motion Detection	Up to 4 areas				
Network					
Protocols	IPv4, IGMP, ICMP, ARP, TCP, UDP, DHCP, RTP, RTSP, RTCP, DNS, DDNS, NTP, FTP, UPnP, HTTP, HTTPS, SMTP, SSL				
Compatible Integration	ONVIF(Profile S),API				
Interface					
Network	10/100M Base-TX Ethernet				
General					
Power	12 V DC±25%, PoE (IEEE802.3 af)				
	Power consumption: Max 5.5W				
Dimensions (Ø x H)	Φ118x 96 mm (Φ4.6” x 3.8”)				
Weight	0.2kg (0.44lb)				
Working Environment	-30°C ~ +60°C (-22°F ~ 140°F), Humidity :10%~90% RH(non-condensing)				
Ingress Protection	IP67				

Dimensions

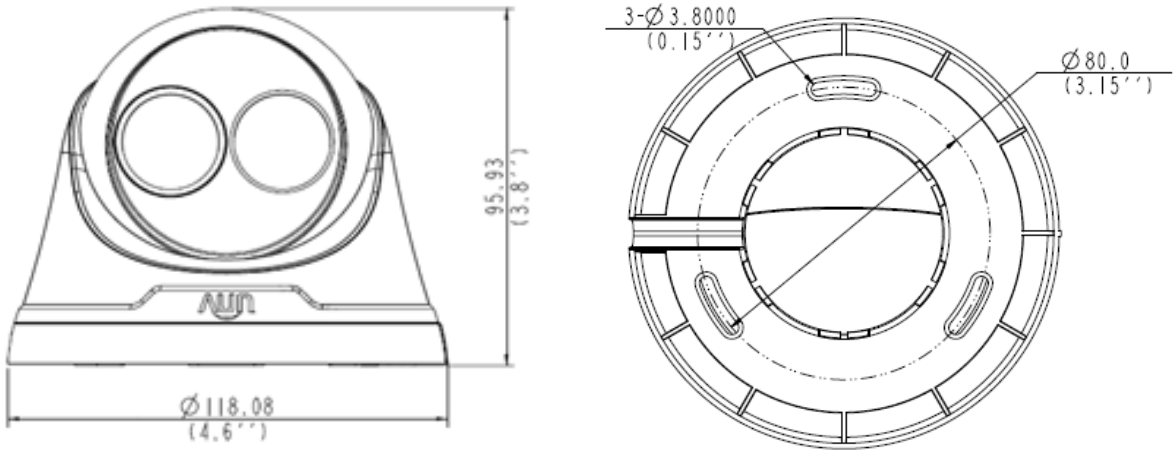

Zhejiang Uniview Technologies Co., Ltd.

South Tower, Building 10, Wanlun Science Park, 88 Jiangling Road, Hangzhou, P.R.China 310051

Email：overseasbusiness@uniview.com; globalsupport@uniview.com

http://www.uniview.com

©2018 Zhejiang Uniview Technologies Co., Ltd. All rights reserved.

*Product specifications and availability are subject to change without notice.