COOLER MASTER

MASTERCASE 5

USER MANUAL

1. PACKAGE CONTENT

Pics	Name	Q'ty	Used for
	#6 - 32*5 Screw (Screw Head Ø6)	1	Lock BKT
	#6 - 32*29 Screw	8	Front Fan
	Stand-off Socket	1	M / B Tray
	Stand-off	7	M / B Tray
	M3*5 Screw	9	M / B Tray
	#6 - 32*10 Screw	2	HDD Cage
	#6 - 32*6 Screw	6	PSU / Fan Cage
	Lock BKT	1	Side Panel
	#6 - 32*6 Screw	2	HDD Cage
	Cable Tie	10	Cable Management
	M3*5 Screw	4	ODD
	Fan Cage	1	Lock BKT
	Ø5*10 Screw	8	Top Fan
	M3*4 Screw	8	2.5" SSD
	3 to 4 Cable	2	Connect to Fan

2. COMPATIBILITY

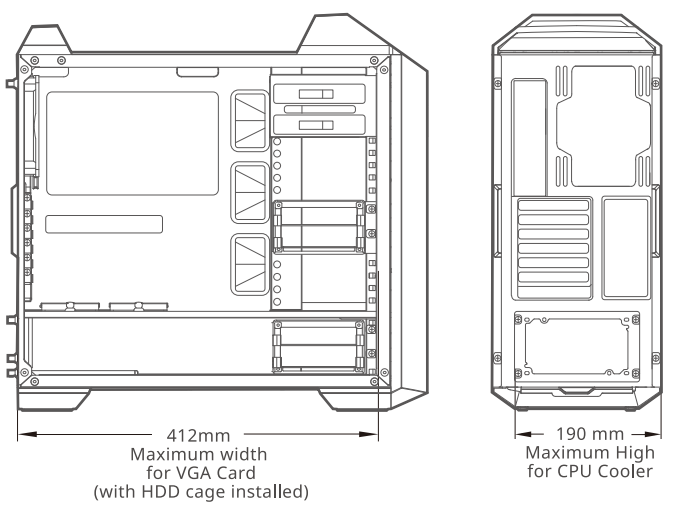

3. MOTHERBOARD INSTALLATION

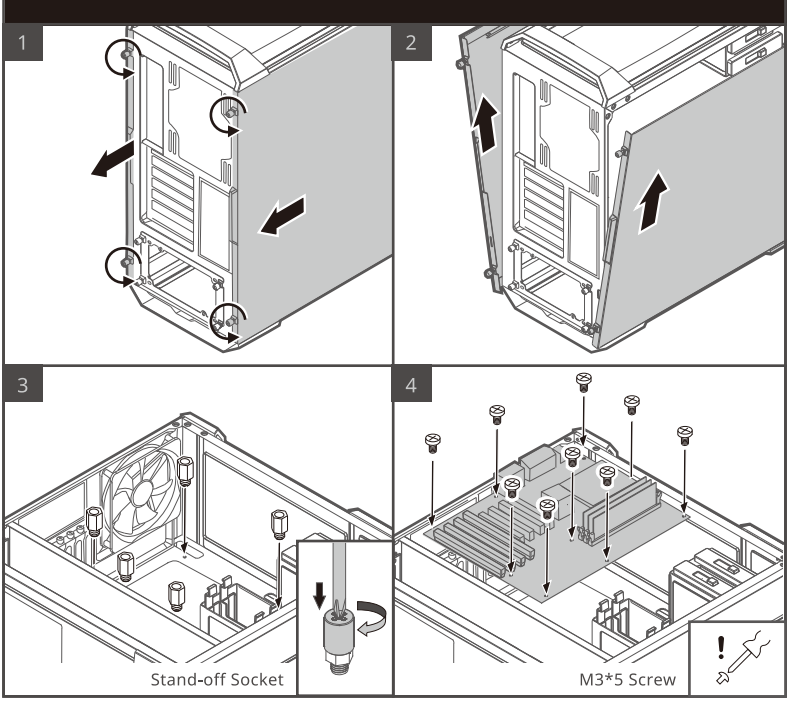

4. POWER SUPPLY INSTALLATION

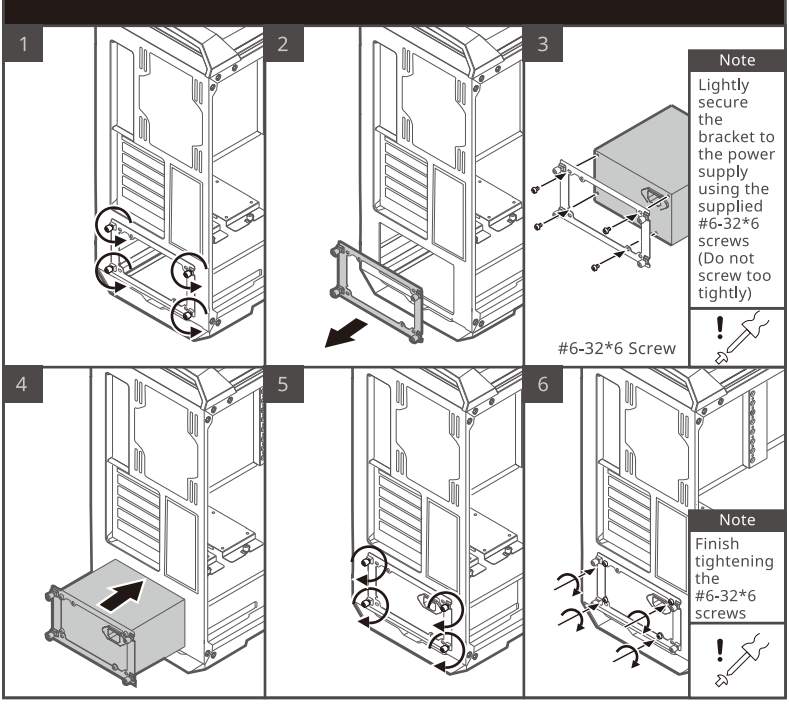

5. HARD DRIVE INSTALLATION

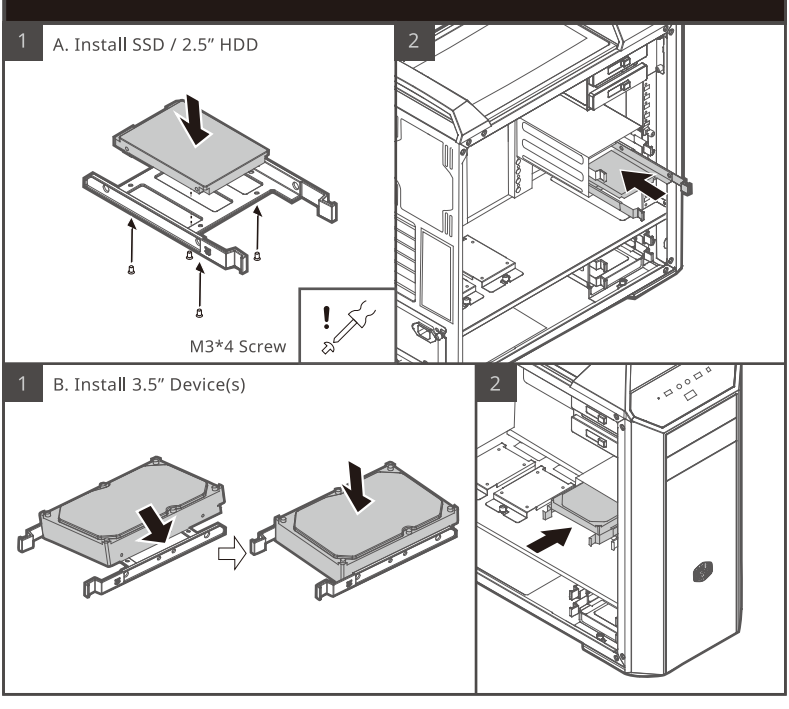

6. HARD DRIVE INSTALLATION

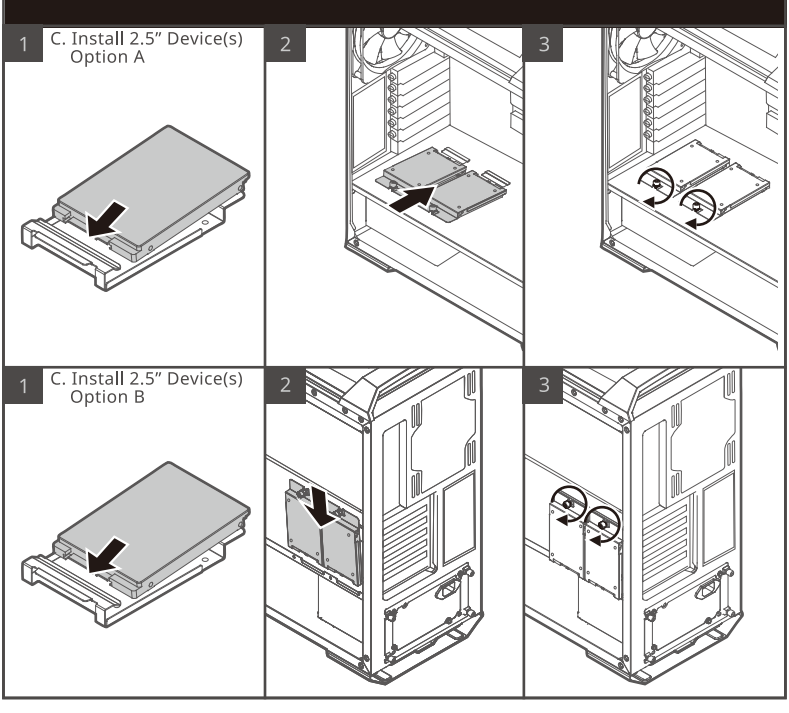

7. OPTICAL DRIVE INSTALLATION

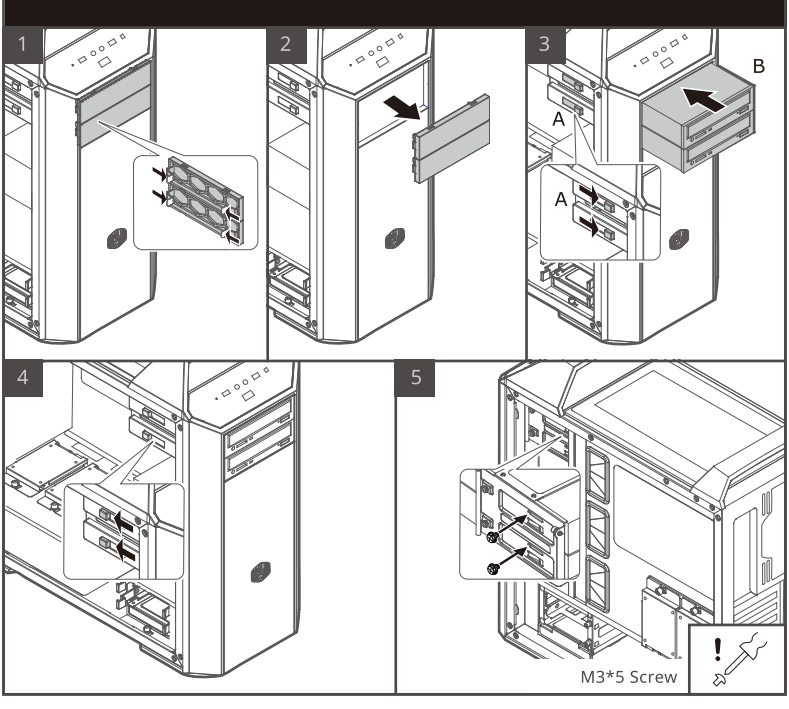

8. 5.25” BAY REMOVAL

1 Remove 5.25” ODD Bay

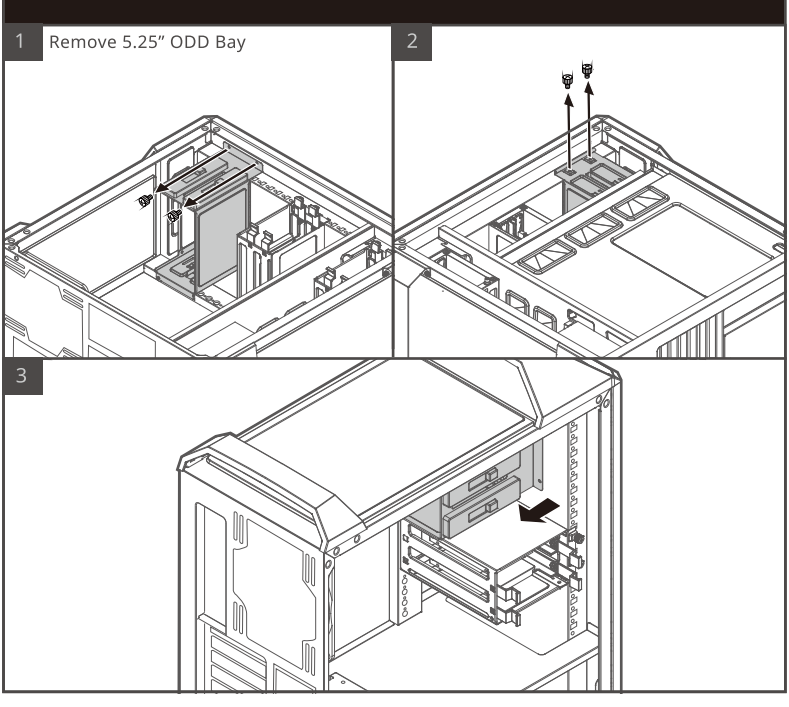

9. HARD DRIVE CAGE ADJUSTMENT

1 Remove and Reposition 3.5” HDD Cage

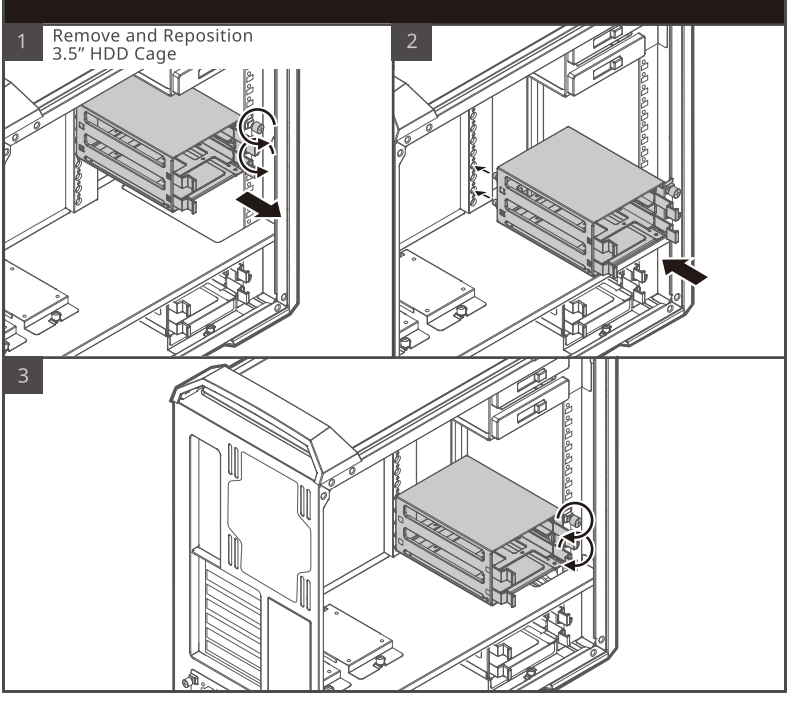

10. HARD DRIVE CAGE ADJUSTMENT

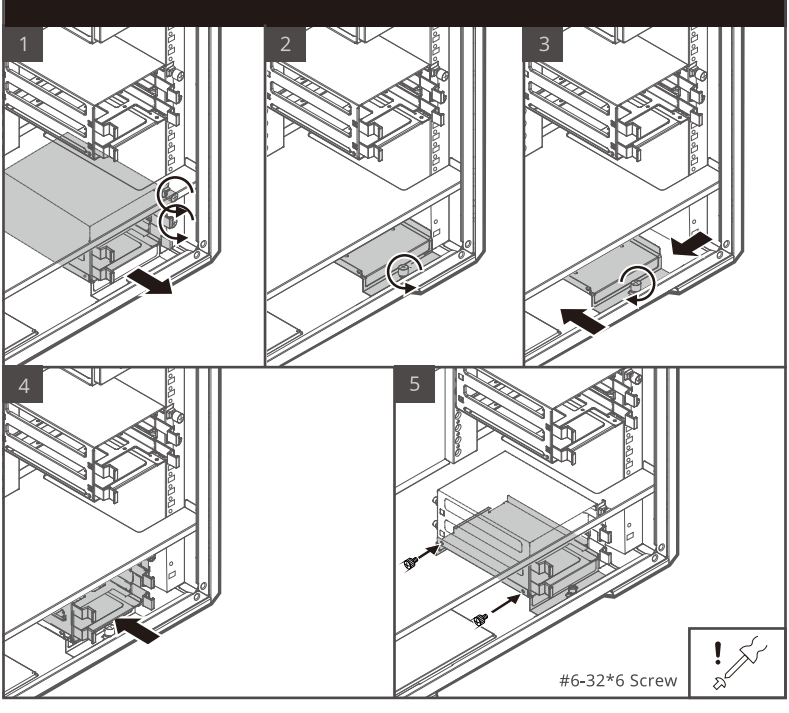

11. FRONT FAN INSTALLATION

1 A. Install Front Case Fan (3x 120mm or 140mm)

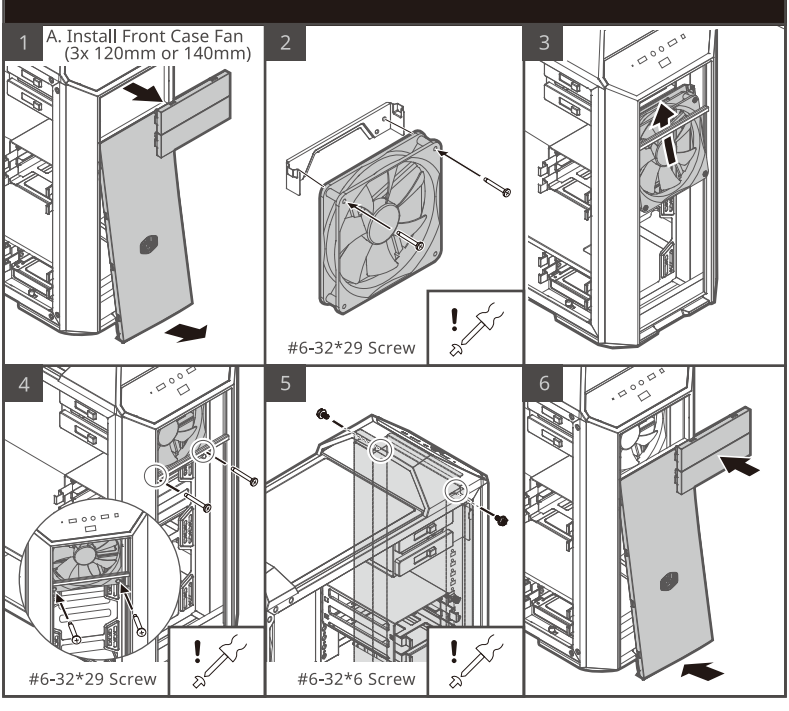

12. TOP AND REAR FAN INSTALLATION

1 A. Install Top Case Fans (2 x 120mm or 140mm)

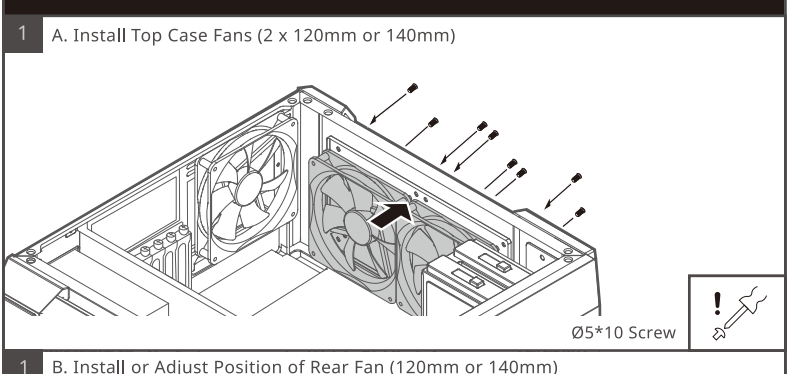

1 B. Install or Adjust Position of Rear Fan (120mm or 140mm)

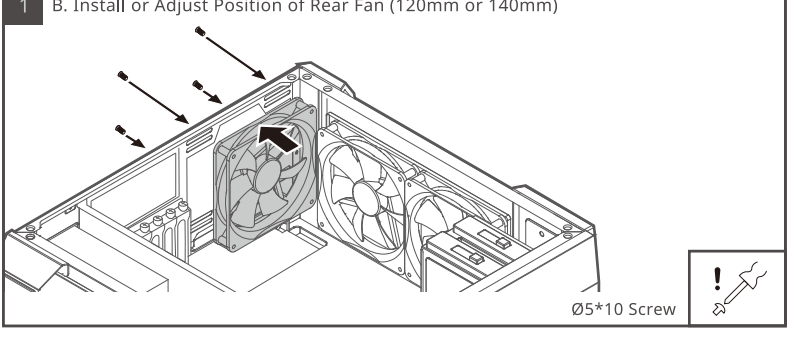

13. FRONT RADIATOR INSTALLATION

1 Install Radiator

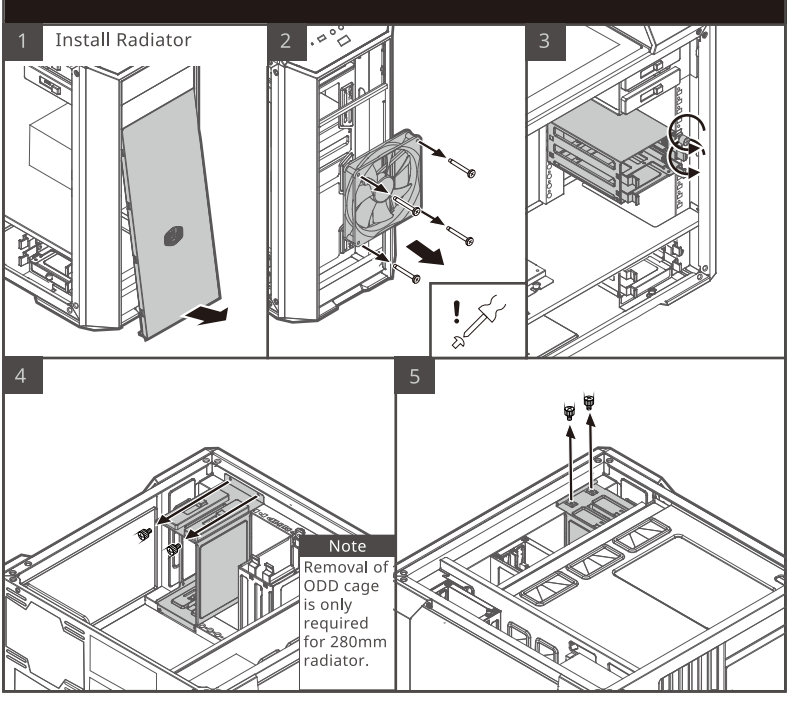

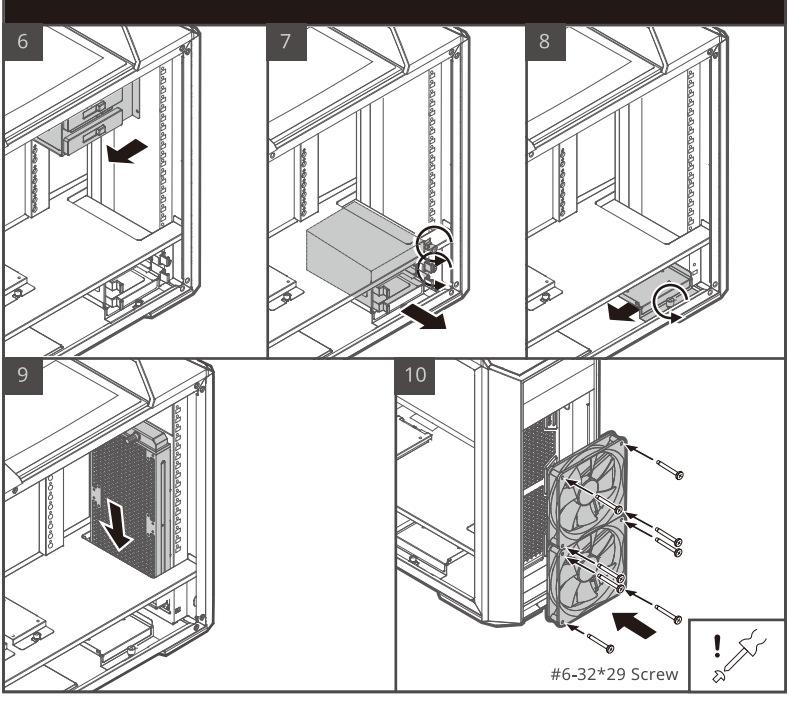

14. ADDITIONAL INFORMATION

Please visit our website at www.coolermaster.com

Asia Pacific | Cooler Master Technology Inc.
8F., No. 788-1, Zhongzheng Rd., Zhonghe Dist.,
New Taipei City 23586, Taiwan (R.O.C.).
Tel: +886-2-2225-3517
Tech Support:
https://account.coolermaster.com/

China | Cooler Master China
Room 2062, Floor 6, No. 421, Weiqing Rd.,
Jinshan District,Shanghai City,China
Tel: +86-21-51872177
Tech Support:
https://account.coolermaster.com/

Europe | Cooler Master Europe B.V.
Lodewijkstraat 1b, 5652AC Eindhoven, The Netherlands
Tel: +31-(0)40-702-0900
Tech Support:
https://account.coolermaster.com/

North America | Cooler Master NA
4820 Schaefer Ave. Chino CA. 91710, USA
Tel: +1-888-624-5099
Tech Support:
https://account.coolermaster.com/

510010772-GP Ver 3.0: 2015/07

©2015 Cooler Master Technology Inc. All Rights Reserved. All trademarks are registered to their respective owners.